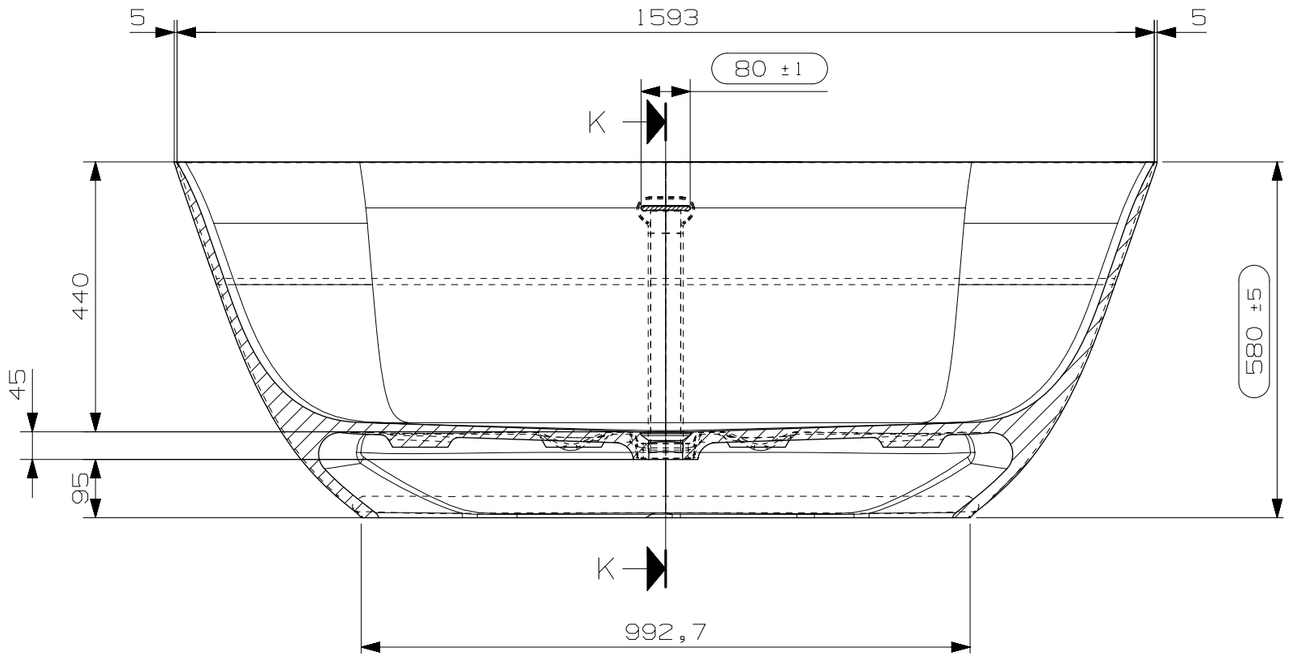

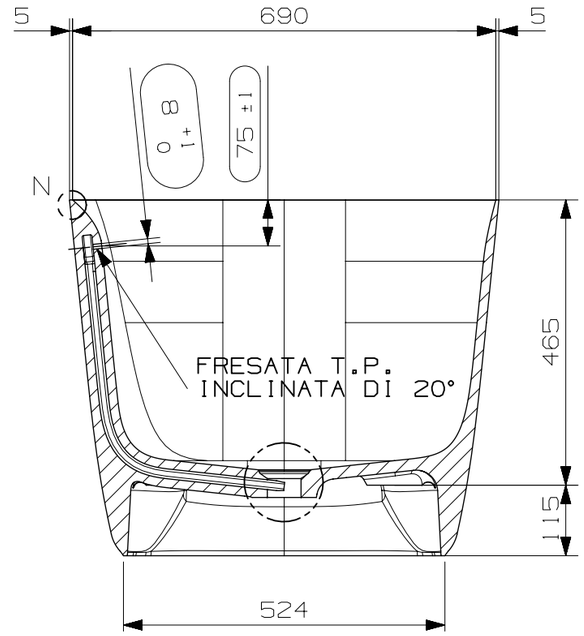

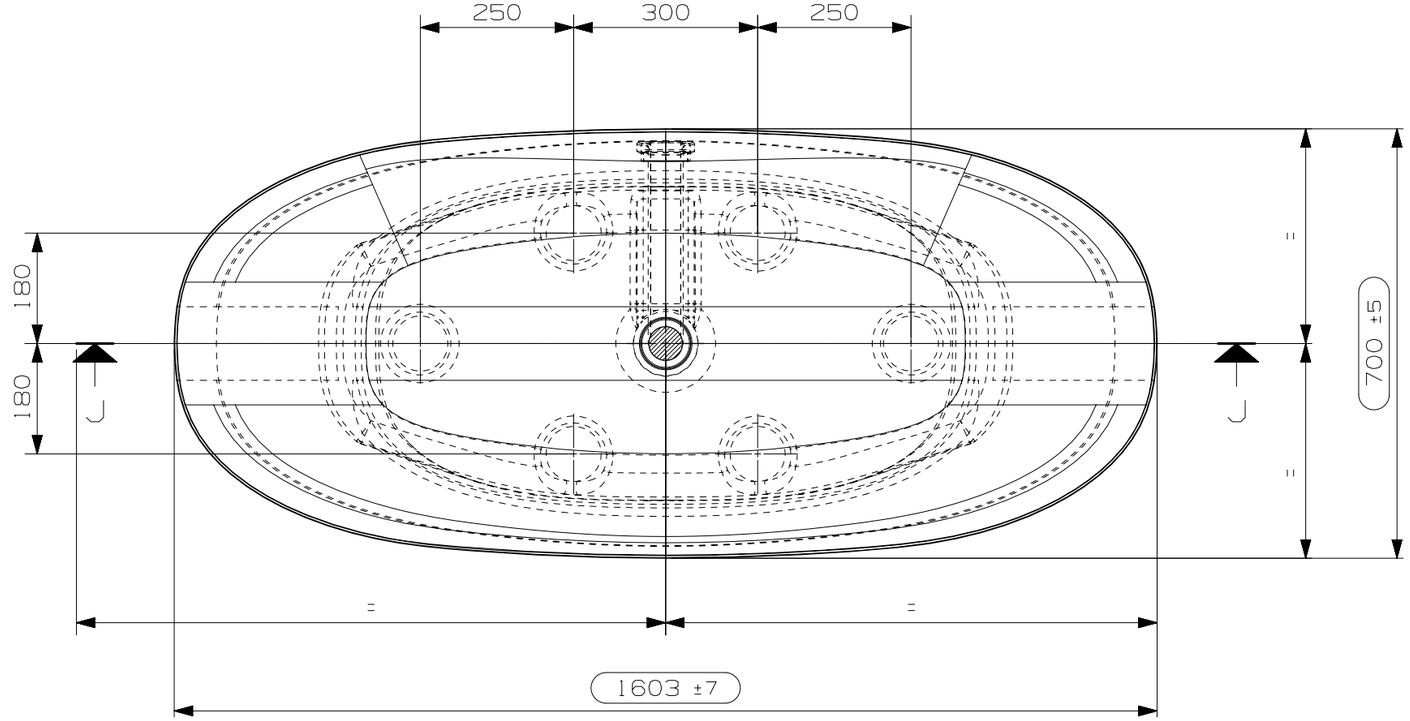

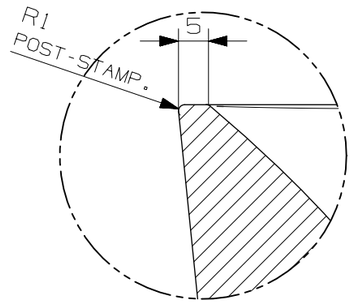

DETAIL N
SCALE 1:1

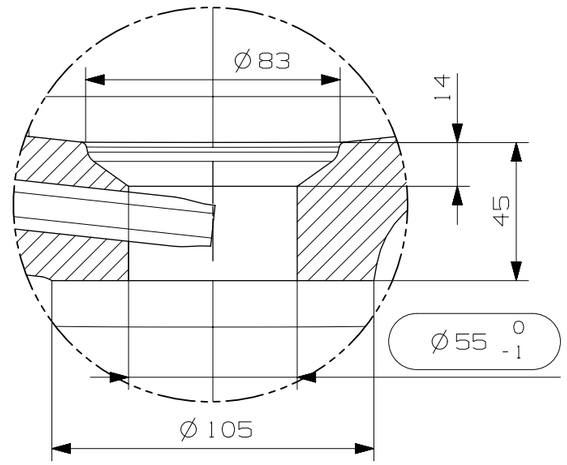

C01296AF47

TORO BATH